AUTONOMOUS CONTROL

Mars In-Situ Propellant Production (ISPP)

William E. Larson
Embedded Technology Development

Introduction

- ISPP will use CO_2 from the Martian Atmosphere to produce the propellants necessary to launch Mars Ascent Vehicle.
- Continuous chemical process which operates over the diurnal cycle.
- Plant must operate for over two years while awaiting Crewed Mission.

In-Situ Propellant Production Process Schematic

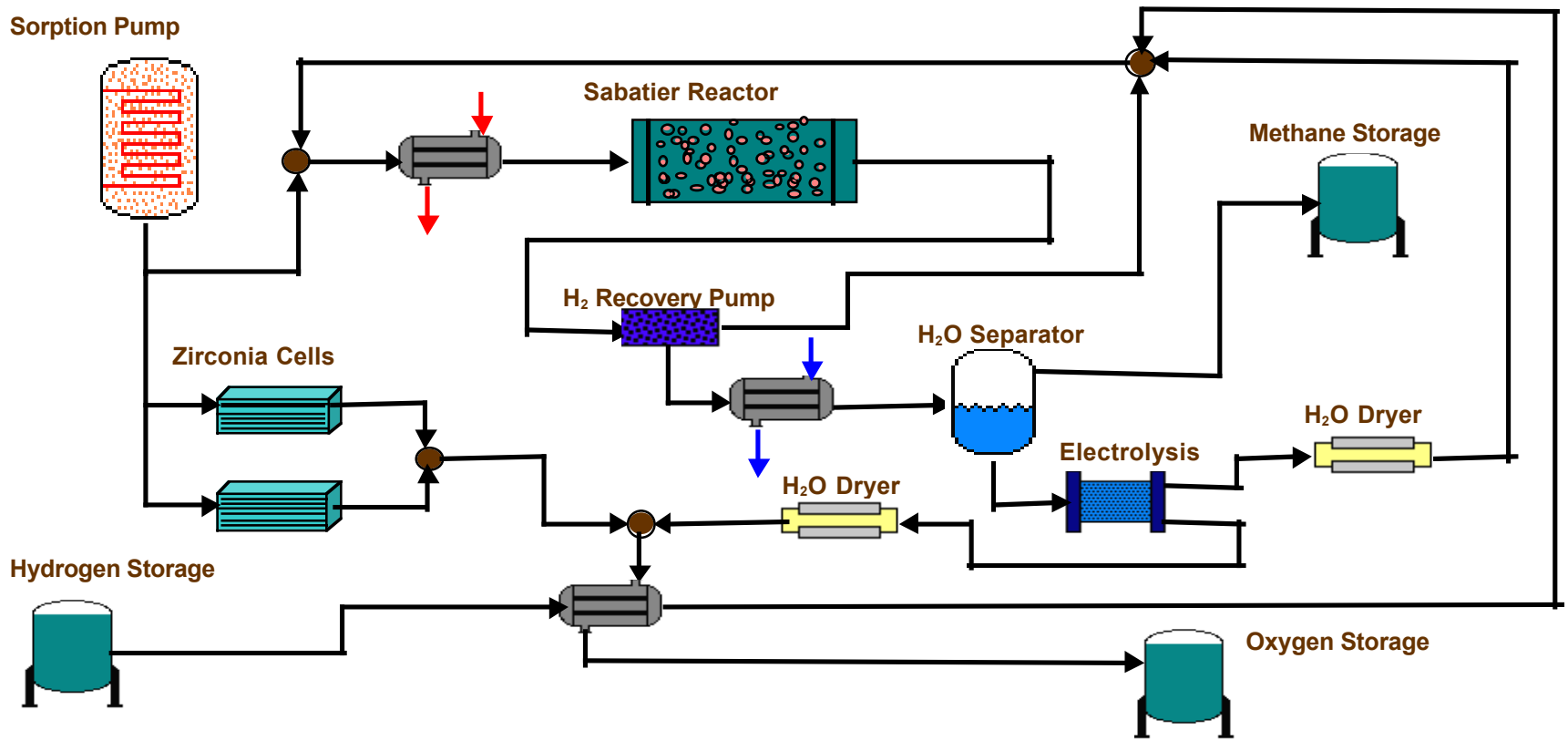

Why Use Autonomous Control?

- Distance to Mars Makes Traditional Methods of Control Implausible.
  - Continuous communication unavailable.
  - Communication time 20 to 40 minutes.
- Plant Processes Will Change Over Time.
- Frees Astronauts to Perform Higher Priority Duties.

Why Model Based Reasoning?

- Compares Predicted Vs. Actual Performance to Determine System Integrity.
  - Looks at system as a whole, not as individual parts.
- Fault Tolerance
  - Component failures can be modeled.
- Sensor Fusion
  - Allows deduction of failed measurements based on other measurement values.

Multi-Center Project

- Collaboration Between Three Centers, Johnson, Ames and Kennedy.
  - Johnson Space Center
    - Focal point for hardware development.
    - Adjustable Autonomy Test Bed.
  - Ames Research Center
    - Provider of Model-based Programming Language.
  - Kennedy Space Center
    - ISPP Model Development

Johnson Space Center

- Hardware Prototype
  - Sorption Pump prototype currently under test.
  - Sabatier Reactor due from Lockheed Martin this fall.
  - Prototype cryogenic cooler, using commercial equipment, is already under test.
    - "Flight Type" unit is under development at Nat. Institute of Std. and Technology (NIST). It should be delivered late summer.

JSC
(Continued)

- Modifying Test chamber to simulate the Mars environment (dust, pressure, atmosphere, temperature).
- Adjustable Autonomy Test Bed.
  - Software/Hardware Interface
  - User Interface.

Ames Research Center

- Artificial Intelligence (AI) Research and Development.
  - Entire Division dedicated to AI research.
  - Extensive experience with Model Based Reasoning.
  - Reasonably mature AI product called Livingstone which will be flight tested on Deep Space 1 this fall.

Kennedy Space Center

- Model the ISPP Using Livingstone
  - Develop ISPP Autonomous Control System.
    - Control program will operate against simulation of ISPP hardware.
  - Work with Ames to Enhance Livingstone.
  - Integrate ISPP model with JSC's Autonomy Test Bed.

Current Status

- Livingstone Installed at KSC.
  - Learning Language, Building test models.
- Local & University Chemical Engineers developing system models.
- Simple ISPP Controller built by year end.
- Complex ISPP Model to be completed by October 1999.
- Concurrently build Graphical User Interface and Simulation